INSTALLATION

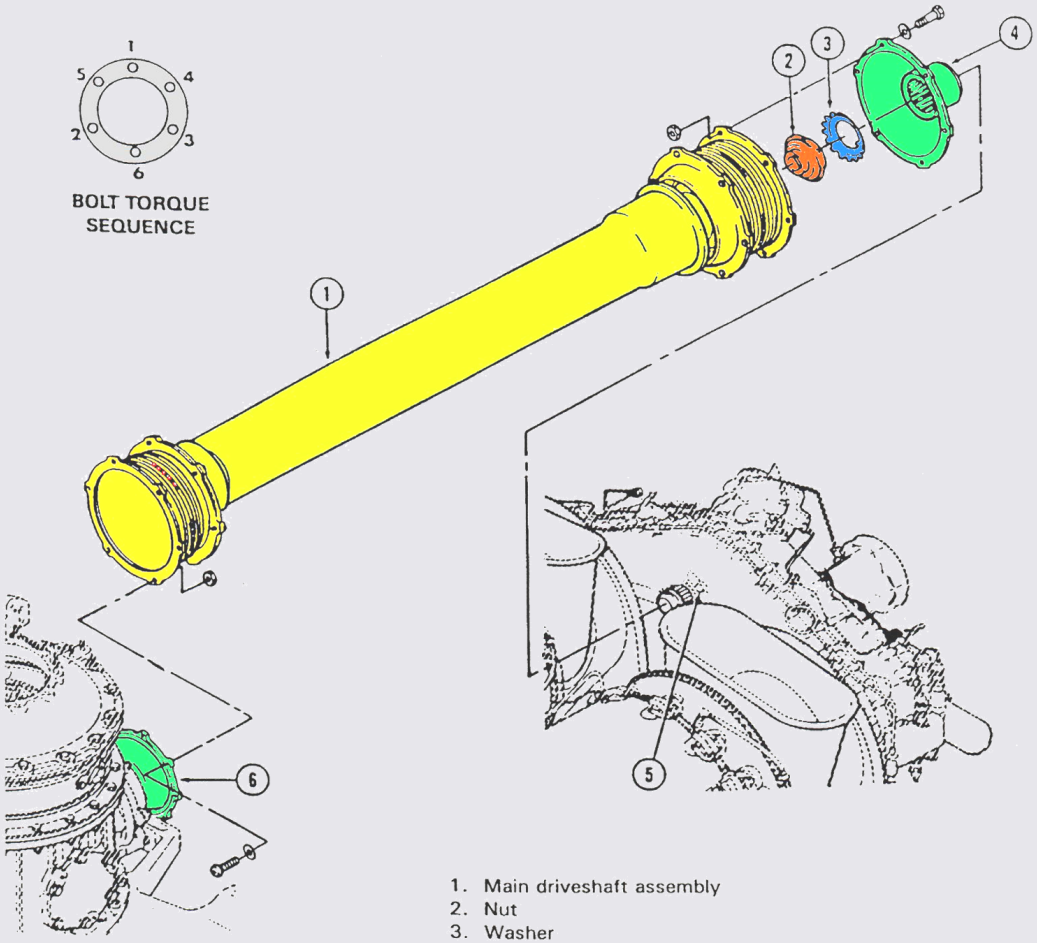

1. Main driveshaft assembly
2. Nut
3. Washer
4. Adapter
5. Engine outlet shaft
6. Transmission input drive quill
7. Overtemperature indicators (Temp-plates)

SP & PRIOR

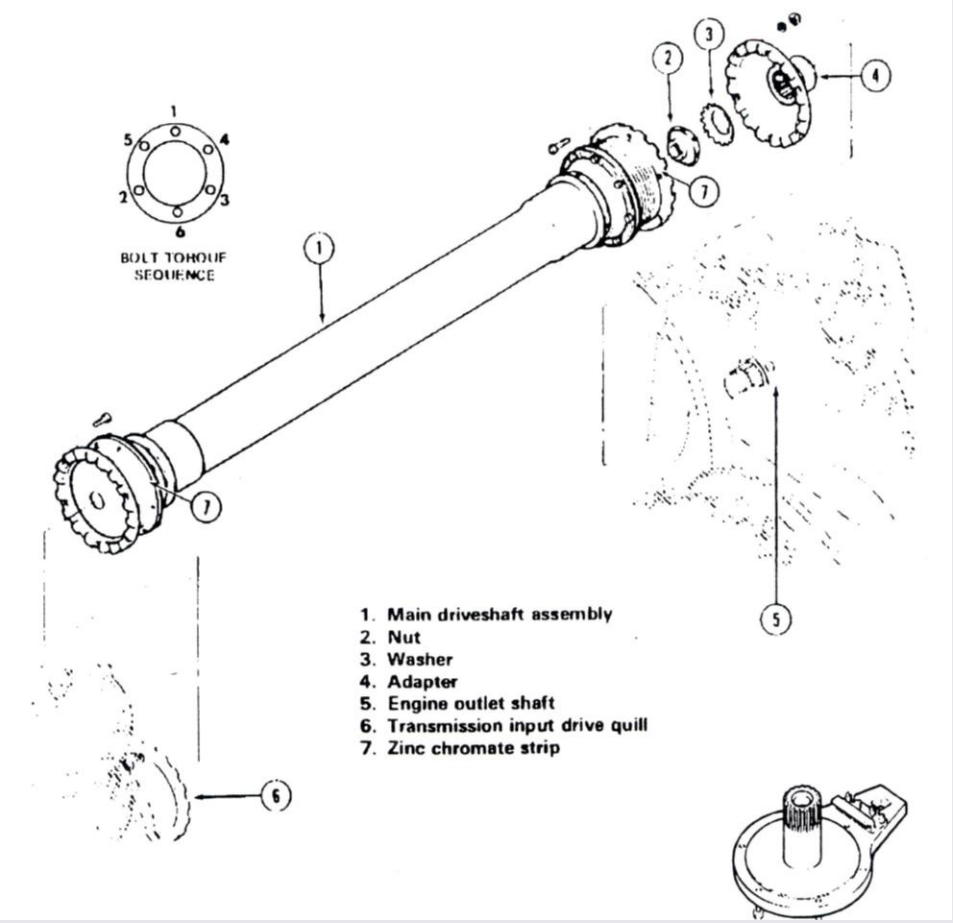

MAIN DRIVE SHAFT

ORIENTATION

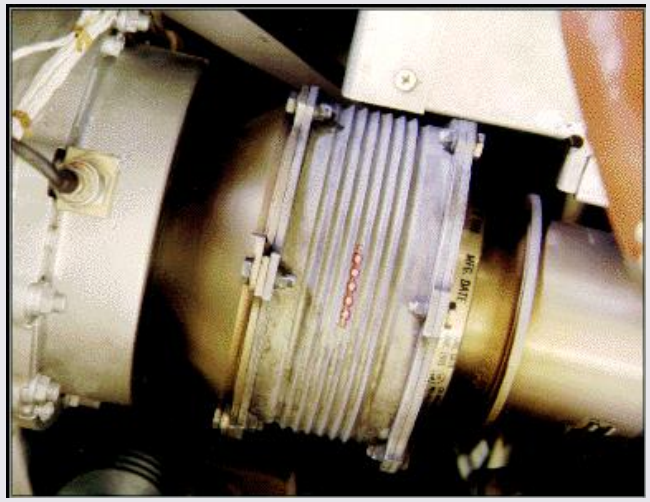

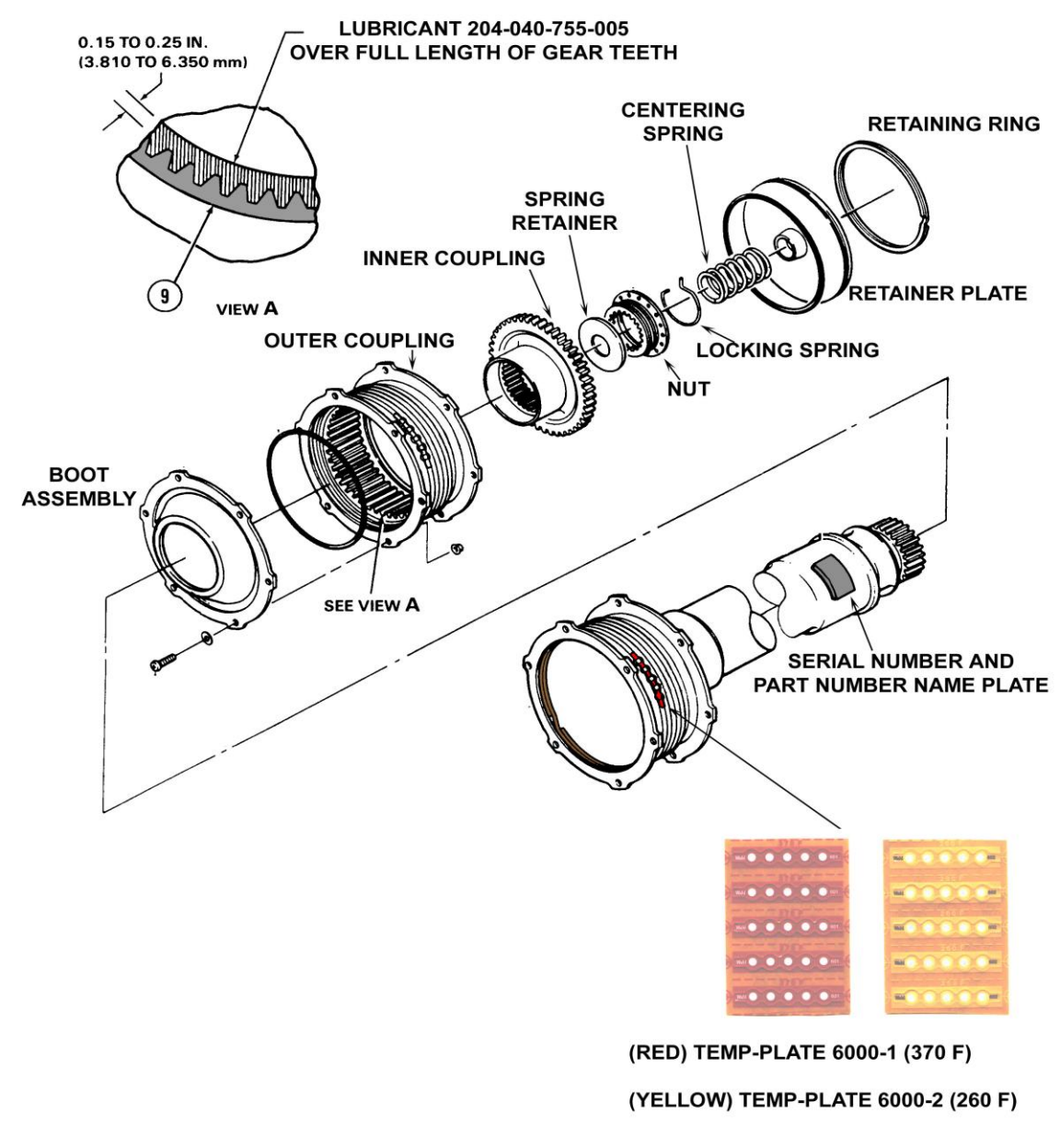

DIS-ASSEMBLY

- 2500 OVERHAUL
- 600 HOUR / 12 MONTH

DIS-ASSEMBLY

RETAINER PLATE

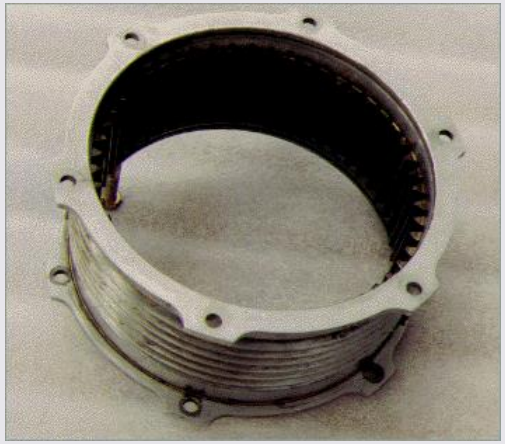

OUTER COUPLING

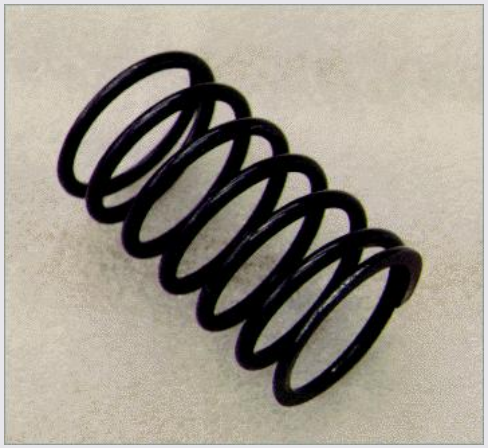

SPRING

NUT

INNER COUPLING

BOOT ASSEMBLY

SHAFT

SP & PRIOR

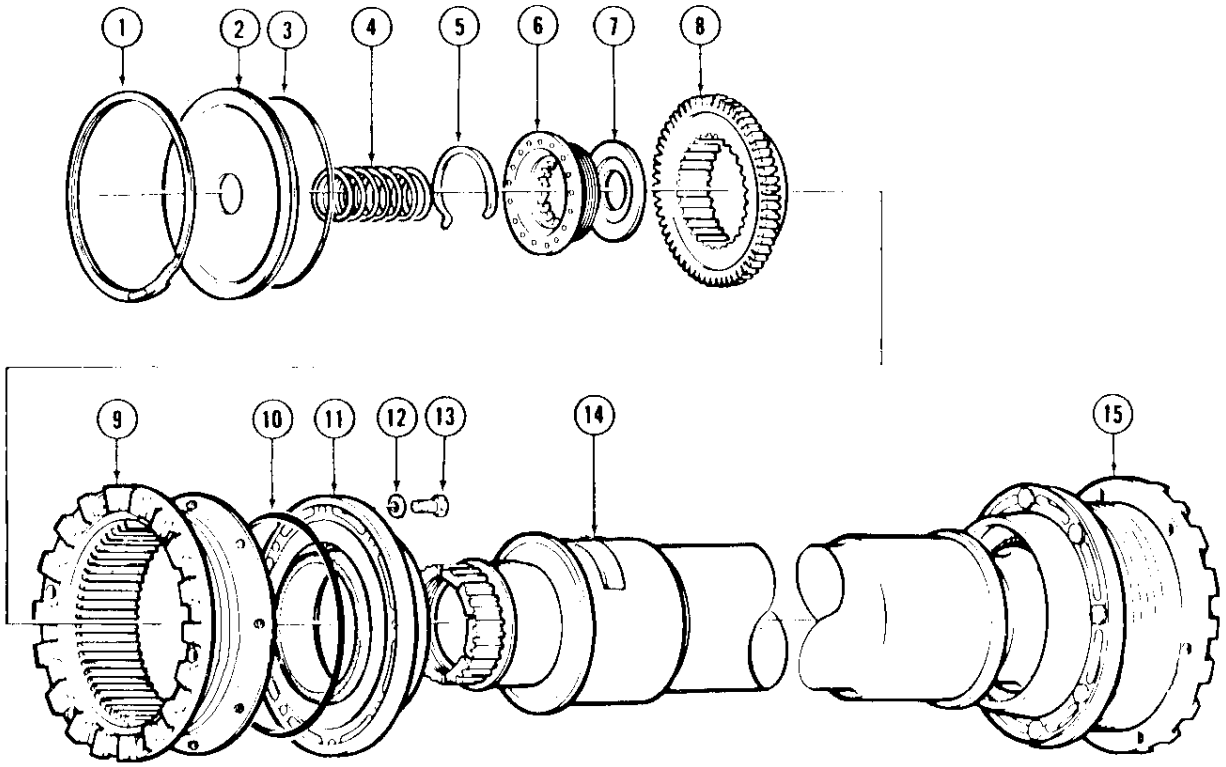

1. Retaining ring
2. Retainer
3. Packing
4. Spring
5. Lock spring
6. Nut
7. Spring retainer
8. Inner coupling
9. Outer coupling
10. Packing
11. Boot
12. Washer
13. Bolt
14. Shaft
15. Coupling assembly

MAIN DRIVE SHAFT

SPECIAL TOOLS

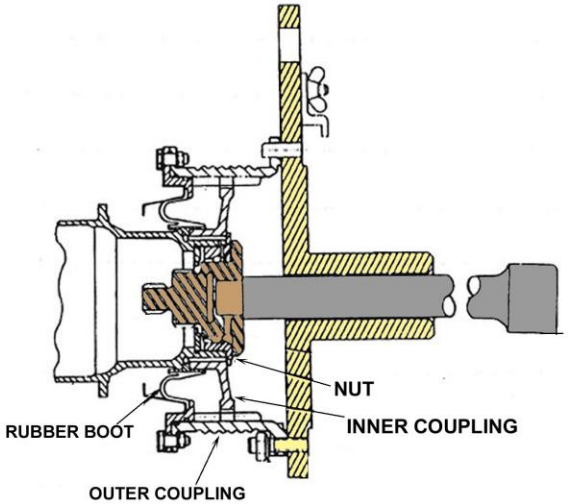

T101306

T103063

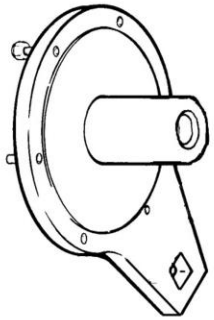

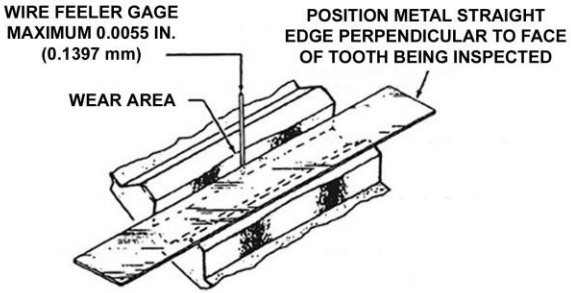

INSPECTION

- CHECK WITH WIRE FEELER GAGE FOR A MAX OF 0.0055 in.

DRIVESHAFT BALANCING

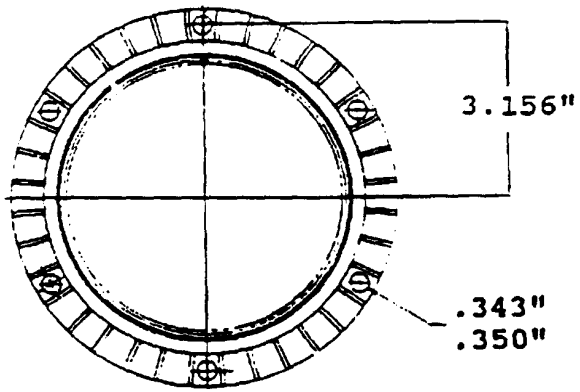

Diagram A 412SP

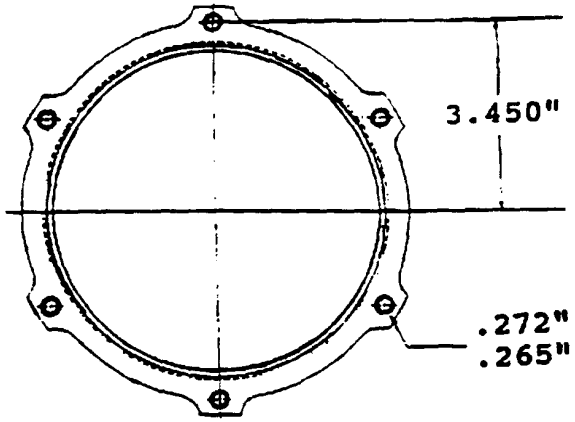

Diagram C 412HP

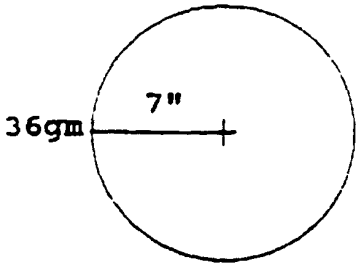

Diagram B

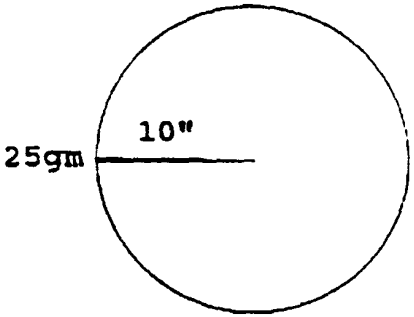

Diagram D

FACTORY BALANCE

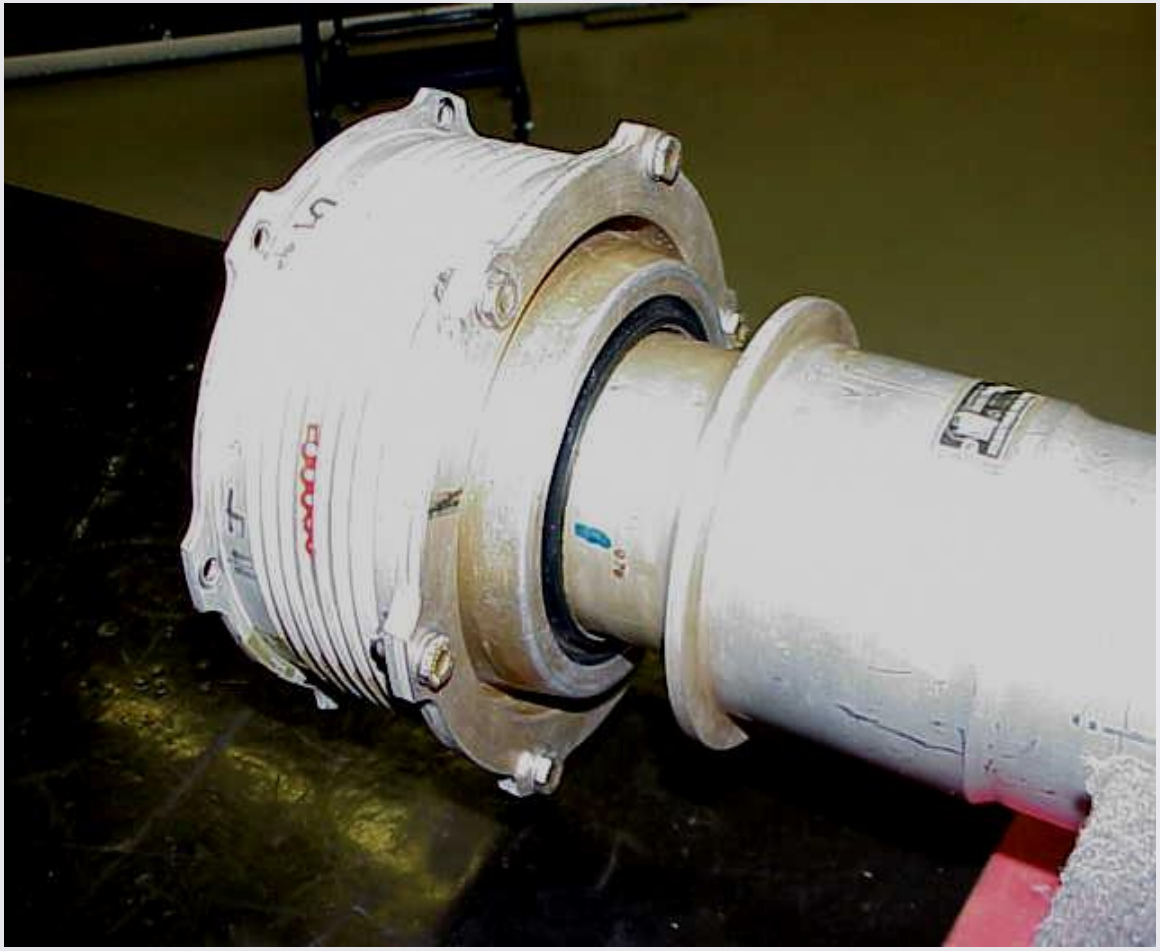

MAIN DRIVE SHAFT

412 REVIEW

1. The main drive shaft rotates 6600 RPM and ___clockwise___ as viewed from the rear of the shaft.

2. The two flexible splined couplings allow for temporary misalignment between the isolation mounted ___transmission___ and the rigid mounted ___Power plant___.

3. The main drive shaft connects to and drives the input quill of the ___transmission___ and is connected to and driven by the ___Power plant___ output adapter.

4. The inner and outer couplings are made from ___Different___ steels.

5. The inner and outer couplings at one end of the shaft will have ___different___ serial numbers.

6. The two springs assist in ___centering___ the shaft during operation.

7. The boots have a ___conditional___ life.

8. The main drive shaft coupling teeth must be inspected each ___12 month/ 600___ hours.

9. The main drive shaft couplings must be ___disassembled___ in order to clean, inspect and repack.

10. ___Special___ tools are required to completely disassemble the main drive shaft.

11. The couplings and boots should not be cleaned using ___solvent___.

12. Field balance of the main drive shaft is achieved by ___adding___ weights to the shaft attaching bolts on the adaptor side.

412 REVIEW (cont.)

13. An out of balance main drive shaft would be indicated by a ___high___ frequency vibration.

14. ___204-040-755-5___ grease is required to pack the couplings.

15. If the dots on the outer couplings change from silver to ___black___, it indicates a possible overheat.